Low Power Wideband Sensing for One-Bit Quantized Cognitive Radio Systems

Abdelmohsen Ali, *Student Member, IEEE* and Walaa Hamouda, *Senior Member, IEEE*

***Abstract*—We propose an ultra low power wideband spectrum sensing architecture by utilizing a one-bit quantization at the cognitive radio (CR) receiver. The impact of this aggressive quantization is quantified and it is shown that the proposed method is robust to low signal-to-noise ratios (SNR). We derive closed-form expressions for both false alarm and detection probabilities. The sensing performance and the analytical results are assessed through comparisons with respective results from computer simulations. The proposed method provides significant saving in power, complexity, and sensing period on the account of an acceptable range of performance degradation.**

***Index Terms*—Cognitive radio, low power, one-bit quantizer, wideband sensing.**

I. Introduction

Wideband spectrum sensing, which consists of observing a wideband and identifying the portions that are occupied and those which are free, is essential in interweave cognitive radio networks [1]. In these networks, unlicensed or secondary users (SUs) are prohibited from accessing an occupied band by the primary user (PU). The SU has to vacate the band and search for another unoccupied band if the PU appears, thus wideband sensing is a must. One of the main approaches to realize wideband sensing is to assume the feasibility of sampling the desired spectrum by the ordinary Nyquist rate [2]. Practically, high computational complexity and power consumption attached to the required ultra high sampling rates and high Analogue to Digital Converter (ADC) resolutions can be relaxed if the sensing performance is acceptable with ultra low precision ADCs (1-3 bits) [3].

In this work, we propose a wideband spectrum sensing system in which a 1-bit ADC is employed. In fact, a 1-bit ADC consumes the minimum power for a given sampling frequency. Current commercially available high-resolution high-speed ADCs consume power on the order of several Watts. For example, the recent 12-bit ADC 12D1600QML-SP from Texas Instruments can process 3.2GSamples/sec at a power consumption of 3.88Watts. On the other hand, a high speed comparator (1-bit ADC) with the same operating frequency is designed to dissipate 20μWatts [4]. Further, the complexity is extremely reduced as automatic gain control is not required for these systems. Also the hardware complexity for the digital signal processing modules including the Fast Fourier Transform (FFT) engine and the power detector will be significantly reduced due to the minimized bit-width for various building blocks. For instance, the FFT module will not involve any multiplications and only additions/subtractions are required. Motivated by the above, we present a complete architecture for the sensing engine. Irrespective of the sensing period being long, the system performance for both non-quantized and 1-bit quantized systems is modelled analytically and evaluated by simulations.

The authors are with the Department of Electrical and Computer Engineering, Concordia University, Montreal, Quebec, H3G 1M8, Canada (e-mail:(ali_abde,hamouda)@ece.concordia.ca).

II. System Model and Assumptions

Consider a CR system operating over a wideband channel divided into N non-overlapping sub-bands. Conventionally, it is assumed that the sub-bands have equal-size bandwidths B [5]. At the CR receiver, the signal is sampled at the Nyquist sampling rate $F_s = NB$. The received signal in the frequency domain can be represented by the $1\times N$ vector given by,

$$\mathbf{R} = \sum_{m=1}^{M} \mathbf{H}_m \mathbf{S}_m + \mathbf{W} \tag{1}$$

where M represents the number of active primary signals that randomly occupy M sub-bands and $M < N$, $\mathbf{H}_m$ is a diagonal $N\times N$ channel matrix, $\mathbf{S}_m$ is the spectrum of the mth primary signal over the mth sub-band, and $\mathbf{W}$ is frequency domain independent and identically distributed circularly-symmetric additive white Gaussian noise with zero-mean and variance $\mathbb{E}[\mathbf{W}\mathbf{W}^T] = N\sigma_W^2$, where $\mathbb{E}$ denotes expectation. Similar to [6], it is assumed that the distribution of the received primary signal over a single sub-band is also circularly-symmetric complex Gaussian (CSCG) with zero-mean and variance σ_S^2. It should be emphasized that this assumption certainly holds only when primary radios deploy uniform power transmission strategies given no channel knowledge at the transmitter side [2]. That is the total power over the entire band is $\mathbb{E}[\mathbf{R}\mathbf{R}^T] = M\sigma_S^2 + N\sigma_W^2$ where all primary users and the noise are assumed to be statistically independent. Finally, the channel is assumed to be static over the sensing interval.

III. Proposed Spectrum Sensing Procedure

The architecture for the proposed one-bit quantized system is shown by Fig. 1. After the RF direct conversion processing, the baseband signal is sampled through a 1-bit quantizer to retrieve the sign from the sample value. A high speed buffer is employed to store one window of captured samples. The samples are segmented into non-overlapped captures where each capture has exactly N samples. If L captures are processed for each window, then the buffer size will precisely contain LN samples. Current RF processors fortunately provide the received signal power that is measured by a received signal strength indicator (RSSI) block [7]. The measured value is reported to the digital processor through a stand-alone high resolution ADC that operates at relatively low sampling rate,

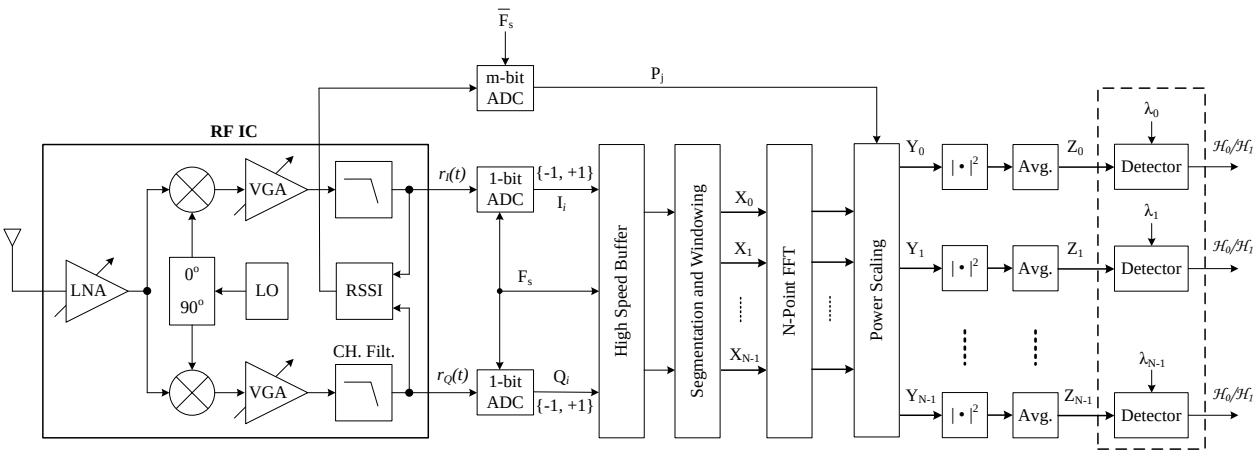

Fig. 1. General architecture for the low power wideband sensing system involving 1-bit quantizers.

$\bar{F}_s$. In this work, each capture is processed by the FFT block to obtain the frequency spectrum over N frequency pins where each pin corresponds to a single sub-band. The frequency transformation and scaling can be defined by,

$$Y_{n,i} \;=\; \sqrt{\frac{P_j}{2N}} \sum_{k=0}^{N-1} X_{k,i}\, e^{-\mathbf{j}2\pi kn/N},\; \mathbf{j} = \sqrt{-1} \qquad (2)$$

where $X_{k,i}$ is the quantized sample value at time index k and capture index i, P_j is the measured signal power, j is an integer representing the window index over time, and n is the sub-band index. According to our model, the measured power value corresponds to the total received power (i.e, $P_j = \mathbb{E}[\mathbf{R}\mathbf{R}^T]$). However, it is unlikely to perfectly estimate the power by the RSSI block. Therefore, we typically model an imperfect measured power to be $P_j = (1+\delta)(M\sigma_S^2 + N\sigma_W^2)$ where δ refers to the percentage of the perfect received power that models the measurement error. For each frequency pin n and window index j, the energy contained in one window consisting of L samples can be defined by $T_{n,j}$ as given by (3). Hence, the decision statistic, $Z_{n,j} = T_{n,j}/L$, is defined to be a simple power estimator that is employed to decide whether this sub-band is a hole or not.

$$T_{n,j} \;=\; \sum_{k=0}^{L-1} \left| Y_{n,j\times L+k} \right|^2 \qquad (3)$$

IV. Energy Detection Performance For Non-quantized System

In literature, the central-limit theorem is typically employed to approximate the probability distribution function (PDF) of the decision statistic $Z_{n,j}$ as a normal distribution under both hypothesises [6]. This is totally a valid assumption as long as the averaging depth (i.e, L) is quite large. In this section, we provide closed-form expressions for the sensing performance independently on the averaging depth by considering the non-quantized system first. This analysis is certainly important as, in the following section, the effect of the 1-bit ADC is demonstrated by evaluating the amount of noise power added to the frequency spectrum for both hypothesises. For each sub-band, n, we wish to discriminate between the two hypotheses $\mathcal{H}_{0,n}$ and $\mathcal{H}_{1,n}$ where the first assumes that the primary signal is not in band and the second assumes that the primary user is present. Using the average energy decision statistic, one can define these hypotheses under the assumption of infinite ADC precision and perfect power measurement as given by (4).

$$\begin{cases} \mathcal{H}_{0,n}:\; Z_{n,j} \le \lambda_n, & \sigma_0^2 \;=\; \sigma_Y^2 \;=\; \sigma_W^2 \\ \mathcal{H}_{1,n}:\; Z_{n,j} > \lambda_n, & \sigma_1^2 \;=\; \sigma_Y^2 \;=\; \sigma_S^2 + \sigma_W^2 \end{cases} \qquad (4)$$

As the wideband sensing objective is to explore the spectral occupancy of primary signals over numerous number of sub-bands (e.g., $N \gg 100$), the FFT output sequence follows a CSCG distribution by the central-limit theorem. Let $Y_{n,i} \sim \mathcal{CN}(0, \sigma_Y^2)$, the random variable $T_{n,j}$ follows a Chi-square distribution with L degrees of freedom [8]. By applying a linear transformation between random variables, one can obtain the PDF for the decision statistic as given by (5) where $\sigma_Z^2 = \sigma_Y^2/L$. Further, the cumulative distribution function (CDF) can be obtained in a closed-form as given by (6) where $\Gamma\big(L, x\big)$ is the upper incomplete gamma function with the parameters L and x.

$$f_{Z_{n,j}}(z) \;=\; \frac{1}{\sigma_Z^{2L}\,\Gamma(L)}\, z^{L-1}\, e^{-z/\sigma_Z^2}\,,\;\; z > 0 \qquad (5)$$

The quality of the detector is described by the Receiver-Operating-Characteristics (ROC) which represents the probability of detection, P_D, and the probability of false alarm, P_{FA}, that are defined as the probabilities that the sensing algorithm detects a primary user under hypotheses $\mathcal{H}_{1,n}$ and $\mathcal{H}_{0,n}$, respectively. By varying a certain threshold λ_n for each sub-band n, the operating point of a detector can be chosen anywhere along the ROC curve. P_{FA} and P_D can be defined as given by (7) and (8), respectively.

$$\begin{aligned} P_{FA} \;&=\; Prob\big[Z_{n,j} > \lambda_n \,|\, \mathcal{H}_0\big] \;=\; 1 - F_{Z_{n,j}|\mathcal{H}_{0,n}}(\lambda_n) \\ &=\; \sum_{k=0}^{L-1} \frac{1}{k!} \left(\frac{\lambda_n L}{\sigma_W^2}\right)^k e^{-\lambda_n L/\sigma_W^2} \qquad (7) \\ P_D \;&=\; Prob\big[Z_{n,j} > \lambda_n \,|\, \mathcal{H}_1\big] \;=\; 1 - F_{Z_{n,j}|\mathcal{H}_{1,n}}(\lambda_n) \\ &=\; \sum_{k=0}^{L-1} \frac{1}{k!} \left(\frac{\lambda_n L}{\sigma_W^2 + \sigma_S^2}\right)^k e^{-\lambda_n L/(\sigma_W^2+\sigma_S^2)} \qquad (8) \end{aligned}$$

$$F_{Z_{n,j}}(z) = Prob[Z_{n,j} \le z] = \int_{-\infty}^{z} f_{Z_{n,j}}(t)\,\mathrm{d}t = 1 - \int_{z}^{\infty} f_Z(t)\,\mathrm{d}t = 1 - \frac{1}{\Gamma(L)} \int_{z}^{\infty} \left(\frac{t}{\sigma_Z^2}\right)^{L-1} e^{-t/\sigma_Z^2} \frac{\mathrm{d}t}{\sigma_Z^2} \mathrm{d}t$$

$$= 1 - \frac{1}{\Gamma(L)} \int_{z/\sigma_Z^2}^{\infty} \acute{t}^{L-1} e^{-\acute{t}}\,\mathrm{d}\acute{t} = 1 - \frac{\Gamma\left(L, z/\sigma_Z^2\right)}{\Gamma(L)} = 1 - \sum_{k=0}^{L-1} \frac{1}{k!} \left(\frac{z}{\sigma_Z^2}\right)^k e^{-z/\sigma_Z^2} \quad (6)$$

V. Detection Performance For One Bit Quantizer System

In conventional systems that consider the quantization effect [9], the effect is modelled by adding one more term to the signal variance representing the quantization noise power which is a function of the ADC resolution. Unfortunately, this procedure cannot be applied for the 1-bit quantizer case since the ADC aggressively saturates the incoming signal to two possible outcomes $\{-1, +1\}$ that are uniformly distributed.

By introducing the power scaling operation after the FFT module under perfect power measurement (i.e, $\delta = 0$), a total power transfer is guaranteed to the frequency domain since the defined transform itself is linear and unitary. However, the main objective of the transformation is to reshape the power across various sub-bands. If the input is left un-quantized, the information required for this redistribution process is known in full and the detection error is only introduced due to the noisy environment. When the input is quantized to a single bit and no power gain or loss is guaranteed, then simply the quantization effect can be interpreted as a power leakage process due to the reduced amount of information about the power distribution.

It is understood that an occupied sub-band leaks more power for its adjacent sub-bands when compared to other neighbours that are located far away. However, the number of occupied sub-bands is large enough and is uniformly distributed across the whole band. Therefore, the leakage contribution from various PUs at any pin can still be modelled as a Gaussian signal by central limit theorem. To derive the leakage contribution power value, let us assume $\alpha M \sigma_S^2$ be the amount of leakage power from all occupied sub-bands where α is a constant. As the occupied sub-bands spread randomly across the entire band, the leakage will also be uniformly distributed across all sub-bands. Then, the amount of interfering power to any pin is $\alpha M \sigma_S^2 / N$. Therefore, the power contained by one sub-band under $\mathcal{H}_{0,n}$ would be $\sigma_0^2 = \sigma_W^2 (1 + \alpha\gamma M/N)$ where $\gamma = \sigma_S^2/\sigma_W^2$ is the SNR over one sub-band. One part of the leaked power is distributed over the vacant sub-bands while the remaining part is added to the occupied sub-bands themselves. Thus, one can write the power contained in one occupied sub-band as $\sigma_1^2 = \sigma_W^2 (1 + \gamma - \gamma\alpha + \alpha\gamma M/N)$ where $-\gamma\alpha$ represents the contribution of this sub-band in the total leakage power. In this work, we rely on extensive computer simulations by varying σ_W^2, σ_S^2, M, L, and N to find an optimum estimate for this constant which is found to be $\alpha \simeq e^{-1}$.

It is worth to study the effect of the imperfect power measurement on the system performance. The FFT output samples are scaled so that the total power fits the measured power provided by the RSSI block. In this case, the power contained by one sub-band will be adjusted according to whether this sub-band is occupied or not. Based on the previous discussion, if the sub-band is signal free, the sub-band power under $\mathcal{H}_{0,n}$ will be $\widetilde{\sigma}_0^2 = (1+\delta)\sigma_W^2(1 + \alpha\gamma M/N)$. On the other hand, if the sub-band includes signal plus noise, the sub-band power under $\mathcal{H}_{1,n}$ will be $\widetilde{\sigma}_1^2 = (1+\delta)\sigma_W^2(1 + \gamma - \gamma\alpha + \alpha\gamma M/N)$. As a result, the closed-form expressions for the false alarm and detection probabilities in case of 1-bit quantizer system with imperfect power measurements can be obtained by,

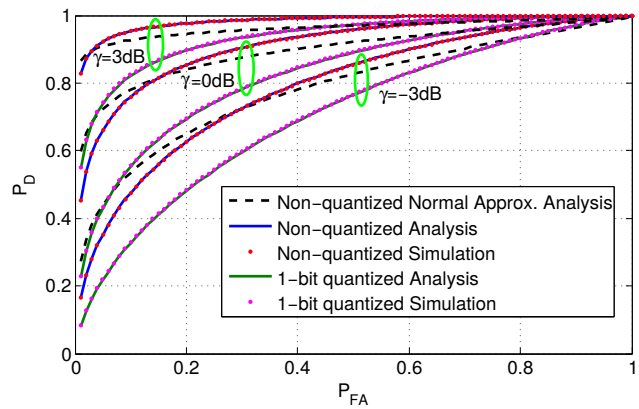

Fig. 2. ROC comparison among the non-quantized analysis, the corresponding approximated analysis [6], the non-quantized simulations, 1-bit quantized system at different SNR values for $L = 8$, $M = 100$, and $\delta = 0$

$$P_{FA}\Big|_{1-\mathrm{bit}} = \sum_{k=0}^{L-1} \frac{1}{k!} \left(\frac{\lambda_n L}{\widetilde{\sigma}_0^2}\right)^k e^{-\lambda_n L/\widetilde{\sigma}_0^2} \quad (9)$$

$$P_D\Big|_{1-\mathrm{bit}} = \sum_{k=0}^{L-1} \frac{1}{k!} \left(\frac{\lambda_n L}{\widetilde{\sigma}_1^2}\right)^k e^{-\lambda_n L/\widetilde{\sigma}_1^2} \quad (10)$$

VI. Simulation Results

In the simulation, we consider a wideband system that employs a total band of 1024MHz which is divided into $N = 1024$ non-overlapped sub-bands, M of which are occupied by primary signals. Each of those allocated sub-bands carries QAM signal that is passed over slow and flat multipath fading channel filter. To simulate the system behaviour, 10^5 trials are processed and the system performance is evaluated based on the decision outcomes. In each trial, a single window is generated where the sub-band occupancies are never changed within a single window. The signs of the received samples are captured to be processed by the detector.

First, the approximated ROC proposed by [6] is compared to our closed-form ROC performance under different SNR values and for relatively high averaging rate (e.g, $L = 8$). The performance curves are shown in Fig. 2. It is clear that

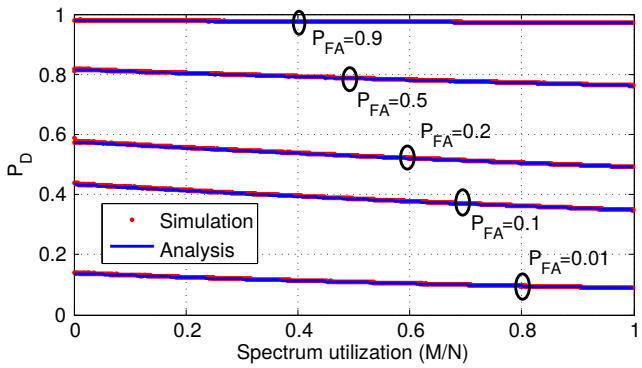

Fig. 3. Detection performance for the one bit quantizer versus the spectrum utilization at $\gamma = 0$dB, $L = 4$, $\delta = 0$, and different P_{FA} values.

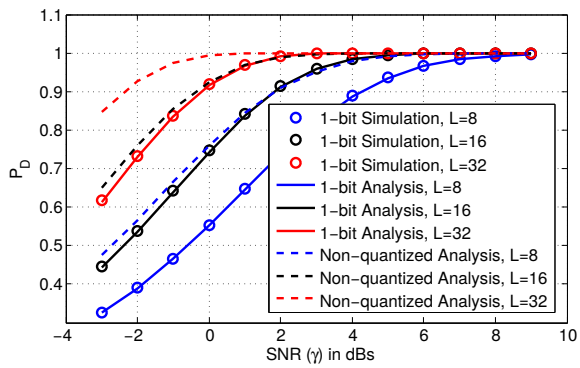

Fig. 4. Detection probability for the non-quantized exact analysis, the 1-bit quantized analysis, and the 1-bit quantized simulation for different time average values for $P_{FA} = 0.1$, $M = 100$, and $\delta = 0$

the Normal approximation introduces considerably large errors in performance even for relatively high averaging rate. The simulation results for the non-quantized system are also shown to demonstrate the accuracy of our derivations. Furthermore, Fig. 2 shows the ROC for the 1-bit quantizer and the non-quantized systems. We emphasize the fact that the simulations exactly match the analysis for the 1-bit quantizer case for various SNR cases and for a different averaging rate $L = 8$ than the one used in Fig. 3.

Next, extensive simulations are performed to verify the constant value $\alpha \simeq e^{-1}$. In these results, more than 100 false alarm rates are simulated and different SNR values are considered. Fig. 3 shows the exact match of the performance between the simulation and the analysis for all possible spectrum utilization ratios (percentage of the occupied bands) and for countable number of false alarm rates. Although these results assume fixed values for other parameters such as $L = 4$ and SNR=0dB, we rely on other results (in Fig. 2 and Fig. 4) to demonstrate the confidence and the effectiveness of our selected constant value. The quantization effect is clear in Fig. 4 where a degradation of about 2dB is observed. By allowing more averaging time, the degradation can be improved.

Fig. 5 introduces the imperfect power measurement to compare the detector performance based on the closed form expressions and the performance obtained by simulations.

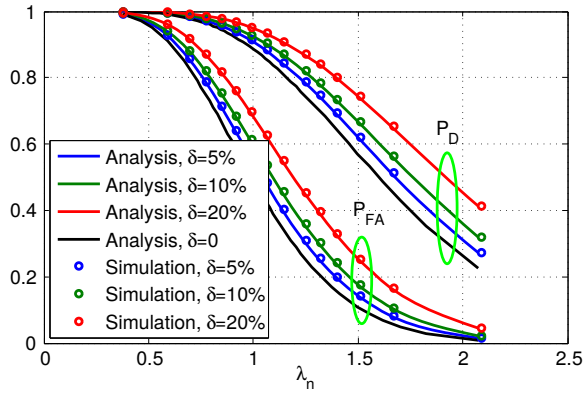

Fig. 5. False alarm and detection probabilities for various tolerance values (δ =5%, 10%, or 20%) for $L = 8$, $M = 100$, γ=0dB, and $\sigma_W^2 = 1$.

The threshold, λ_n, has been evaluated at $\delta = 0$. At a fixed threshold value, it is clear that this positive tolerance presents degradation for the false alarm on the account of an enhancement for the detection rate.

VII. Conclusion

We proposed a 1-bit quantization architecture for wideband spectrum sensing in interweave cognitive radio networks. The ultimate goal is to extremely reduce the power consumption and complexity while the activity of primary users is detected with relatively high accuracy. We derived the non-quantized ROC independent of the sensing interval. Further, we provided analytical expressions for the false alarm and detection rates for the proposed 1-bit quantizer. Simulation results indicate that the derivations are accurate and reliable for various system parameters.

References

[1] L. De Vito, "A review of wideband spectrum sensing methods for Cognitive Radios," in *IEEE Inter. Instrumentation and Measurement Tech. Conf.*, May 2012, pp. 2257–2262.

[2] Z. Quan *et al.*, "Optimal Multiband Joint Detection for Spectrum Sensing in Cognitive Radio Networks," *IEEE Trans. on Signal Processing*, vol. 57, no. 3, pp. 1128–1140, March 2009.

[3] J. Laska, Z. Wen, W. Yin, and R. Baraniuk, "Trust, But Verify: Fast and Accurate Signal Recovery From 1-Bit Compressive Measurements," *IEEE Transactions on Signal Processing*, vol. 59, no. 11, pp. 5289–5301, Nov 2011.

[4] V. Bhumireddy *et al.*, "Design of low power and high speed comparator with sub-32-nm Double Gate-MOSFET," in *Inter. Conf. on Circuits and Systems*, Sept 2013, pp. 1–4.

[5] T.-H. Yu, S. Rodriguez-Parera, D. Markovic, and D. Cabric, "Cognitive Radio Wideband Spectrum Sensing Using Multitap Windowing and Power Detection with Threshold Adaptation," in *IEEE Inter. Conf. on Comm.*, May 2010, pp. 1–6.

[6] Y.-C. Liang, Y. Zeng, E. Peh, and A. T. Hoang, "Sensing-Throughput Tradeoff for Cognitive Radio Networks," *IEEE Transactions on Wireless Communications*, vol. 7, no. 4, pp. 1326–1337, April 2008.

[7] N. Bambal and S. Dixit, "CMOS Limiting Amplifier and RSSI (Received Signal Strength Indicator)," in *Inter. Conf. on Emerging Trends in Eng. and Tech.*, Nov 2011, pp. 238–243.

[8] F. Digham, M.-S. Alouini, and M. K. Simon, "On the energy detection of unknown signals over fading channels," in *IEEE Inter. Conf. on Comm.*, vol. 5, 2003, pp. 3575–3579.

[9] Z. Liu, Y. Liu, and H. Yang, "Energy efficient A/D conversion for sequential wideband multichannel spectrum sensing in cognitive radio network," in *International Conference on Advanced Communication Technology*, Jan 2013, pp. 580–585.