4.4 Circuit Switches

- The function of a circuit switch is to transfer the signal that arrives at a given input to an appropriate output.
  1) From one incoming line to one outgoing line (physical path) First telephone switches
  2) From a specific sub-flow of an input line to a specific sub-flow of a given output line. Modern telephone switches.

4.4.1 Space-Division Switches

- Provide a separate physical connection between inputs & outputs (separated in space).
- Crossbar switch: consists of *N x N* cross-points
  (*N*: number of input lines = number of output lines)
- Non-blocking switch: connection requests are never denied because of lack of connectivity resources (cross-points)
  - Denied only when the requested outgoing line is engaged in another connection.
- Complexity: N^2
  - Can be reduced by using multi stage switches

Crossbar Space Switch

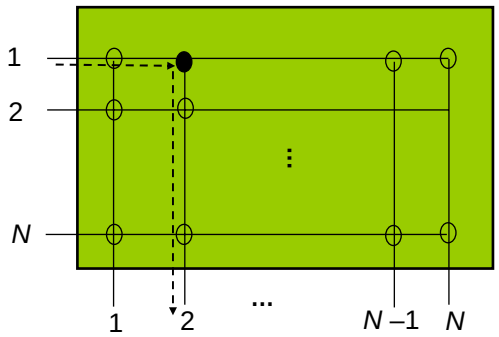

Multistage switches

- *Fig 4.35*
- First stage: *N/n nxk* switches
- Intermediate stage: *k N/n x N/n* switches
- Third stage: *N/n kxn* switches
- If *k<n*, obviously, the switch is not non-blocking (in fact, if *k<2n-1*, not non-blocking)

$2(N/n)nk + k\,(N/n)^2$ crosspoints

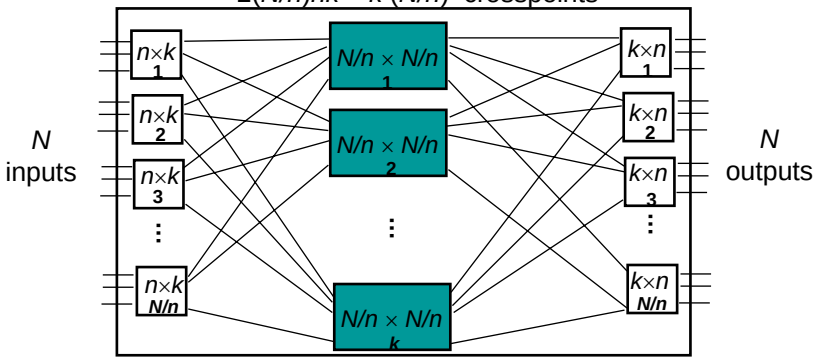

Multistage switches

- If *k=2n-1*, the multi-stage switch is non-blocking
- *Fig 4.36*: worst case
  - The max number of intermediate switches not available to connect the desired input to the desired output is *2(n-1)*. So if k=*2(n-1)+1=2n-1*, ⇒ non-blocking

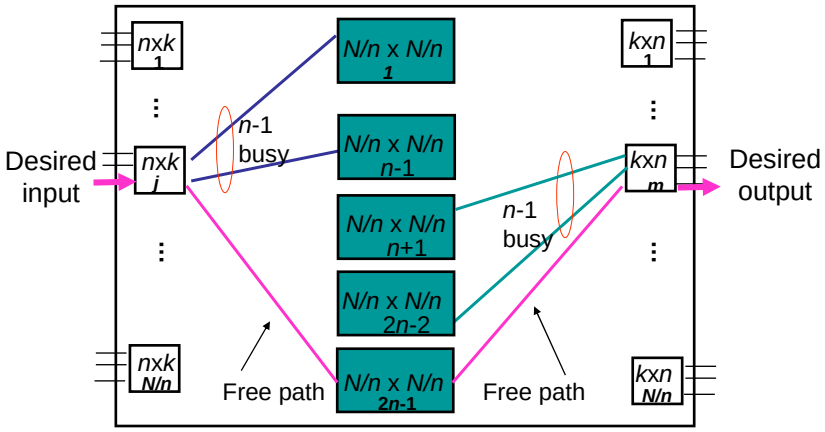

Multistage switches

Total number of cross-points in a multistage switch.

- Input switches: $\frac{N}{n} \times nk = Nk$
- Intermediate switches: $k\left(\frac{N}{n}\right)^2$
- Output switches: $\frac{N}{n} \times kn = Nk$

$\Rightarrow \quad 2Nk + k\left(\frac{N}{n}\right)^2$, when $k = 2n\text{-}1 \Rightarrow \; 2N(2n-1) + (2n-1)\left(\frac{N}{n}\right)^2$

When $n \approx \left(\frac{N}{2}\right)^{\frac{1}{2}}$, the number of cross-points is minimized

$$4N((2N)^{\frac{1}{2}} - 1) \sim N^{1.5}$$

4.4.2 Time-Division Switches

- TSI: time-slot interchange
  - *Fig 4.37*: write slots in order of arrival
    Read slots according to connection permutation.
  - If 8000 frame/sec, the max no. of slots per fame:
    = 125 μsec / (2 x memory cycle time)

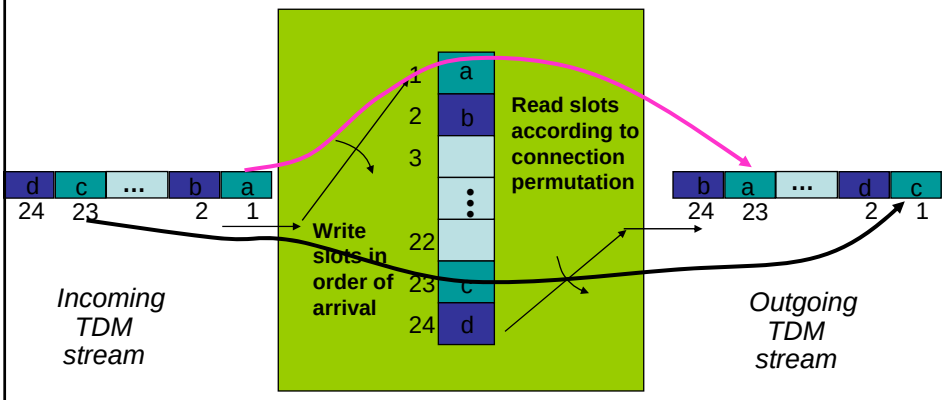

Time-slot interchange

Time-Space-Time switches

- Multistage switch: switches in input and output stages are replaced by TSI switches
  - Input stage: nxk TSI switches
  - Output stage: kxn TSI switches

If k=2n-1, the internal speed is nearly double the speed of incoming line

- The first slot out of the input stage ⇔ the first output line in the original multistage switch

  ⇒ the first slot will be directed to intermediate switch 1, all other intermediate switches are idle during the first time slot.

  similarly, in time slot *i* ($1 \le i \le k$), all intermediate switches are idle except the *i*th intermediate switch
- During any time slot, only one intermediate switch is active

Flow of time slots between switches

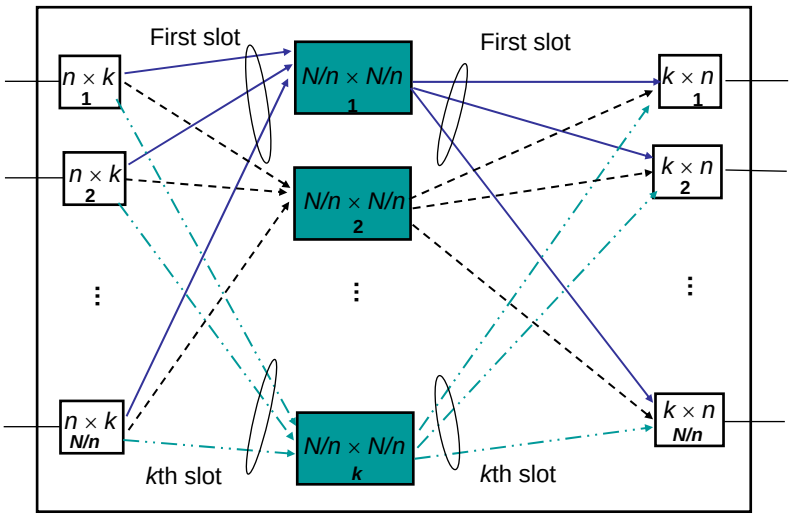

- Only one space switch active in each time slot

Time-Space-Time switches

- We can replace the k intermediate switches with a single crossbar switch that is time-shared among the k slots
- Result in much more compact design than space switches

  e.g: *4096 x 4096* time-space-time switch, *N=4096*

  128 slots/input frame *n=128*

  Input stage: $\frac{N}{n}$ *=32*, input TSI switches *(n x k)*

  K=2n-1=255, internal speed $\cong$ *2 x input speed*.

  Intermediate stage: one *32x32* time-shared crossbar switch

  Output stage: *32 k x n* TSI switches

Time-Share the Crossbar Switch

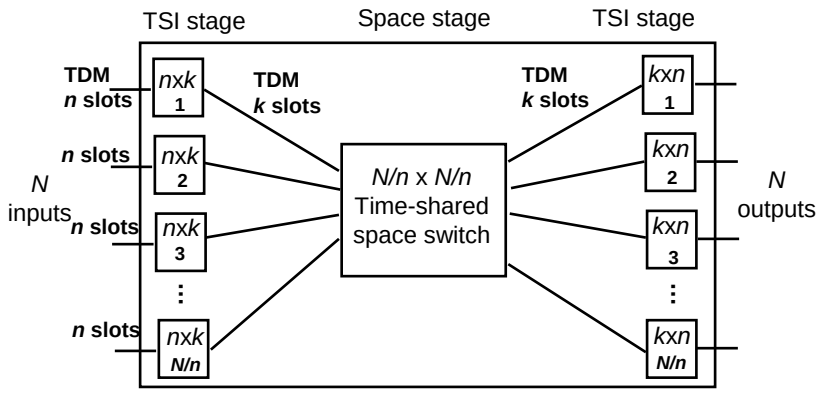

- Interconnection pattern of space switch is reconfigured every time slot
- Very compact design: fewer lines because of TDM & less space because of time-shared crossbar

Example:

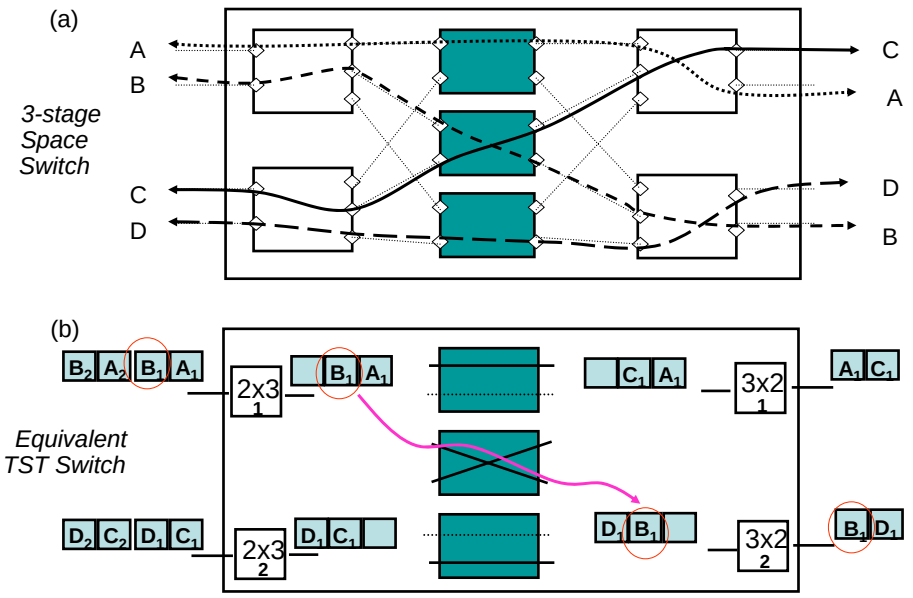

4.5 The Telephone Network

- Three phases of connection-oriented communications:
  1. User pick up the phone → a current flow goes to the switch at the local telephone office indicating a call request → the switch prepares to accept the dialled digits → user dials the dest phone number (a sequence of pulses or a sequence of tones) → the switch convert these pulses or tones to telephone numbers → the source switch uses telephone-signalling network to find a route to the destination office → the dest office ringing the dest user → conversation begins when the dest phone is picked up
  2. Message transfer phase
  3. When users hang up phones, call is terminated, resources released

4.5 The Telephone Network

- LECs (Local Exchange Carries) provide local phone service in LATAs (Local Access and Transport Areas).
- IXC (Interchange Carriers) provide communications between LATAs, long distance service
- User phone to local telephone office: twisted pair of copper wires, analog signals, “last mile”
- Between telephone offices: optical fibers, digital signal.

4.5.1 Transmission Facilities.

1) Fig 4.45 Local loop
   - Local Telephone office $\xrightarrow{\text{Feeder cable}}$ serving area interface $\xrightarrow{\text{Distribution cable}}$ pedestals —— user telephone
   - User to local switch: a single pair of wires
   - Inside the networks, 2 pairs: one transmit pair, one receive pair
   - Hybrid Transformer: echo cancellation
   - DCC: Digital cross-connect (Fig 4.47)
2) Between Switches: SONET-based optical networks.
   - SONET: ADM. or DCC

Switch and DCC

- Switch is generally configured using signaling to establish paths (dynamic)
- Digital Cross Connect is similar to switch except that is is semi-permanent, usually configured manually by network operators rather than signaling process.

4.5.2 End-to-End Digital Service

- “last mile” analog
- Early 1980s, ISDN: Integrated Service Digital Network
  - BRI: *2B+D* B: *64kbps* D: *16 kbps*.
  - PRI: 23B+D
- BISDN:

  Broadband ISDN →

  ATM: Asynchronous Transfer Mode →

  Adopted Very Slowly, few service can use it

4.6 Signalling

- In very earliest telephone systems, operator manually set up the connections. (still used in set up SONET paths):
  - Long distance: more than one operators involved, may take 20-30 mins to set up
- SPC: (stored-program control) switches can be controlled by computers. (*Fig 4.50*)
  - Long Distance: more than one computers involved → signalling network (Fig 4.51)
  - Intelligent network: provide credit-card call, 800 calls etc. to enhance the basic telephone service.

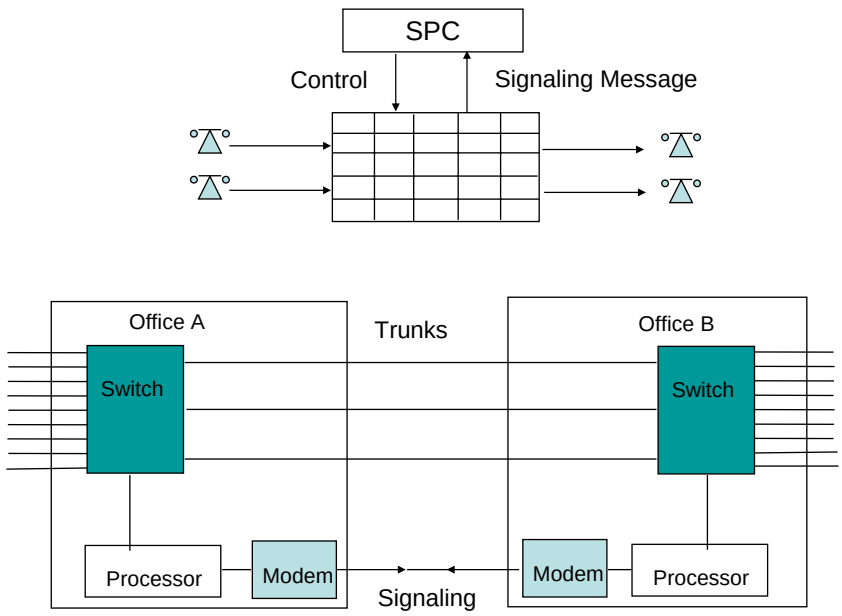

4.6.2 Signalling system #7

- User or data plane: physical layer connections for voice signals
- Control plane: SS7 network

SS7: a packet switching computer network.

- Fig 4.54 MTP: message transfer part
- MTP 1 —— physical layer
- MTP 2 —— Data link layer
- MTP3 —— Network layer
- ISUP (ISDN user port)/TUP (Telephone user part): basic phone call set-up, management and release.
- SCCP —— Transport layer
- TCAP —— Database queries, intelligent networks

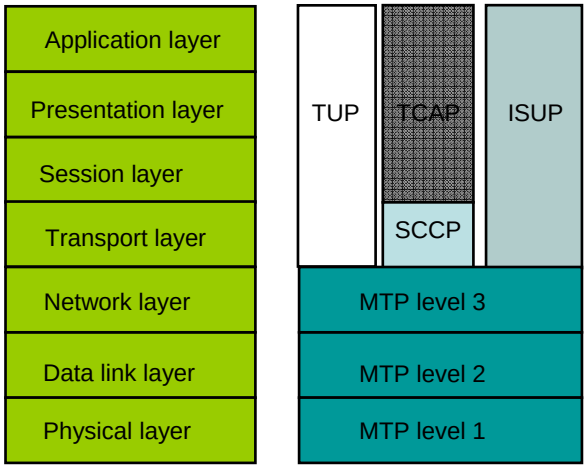

Traffic concentration

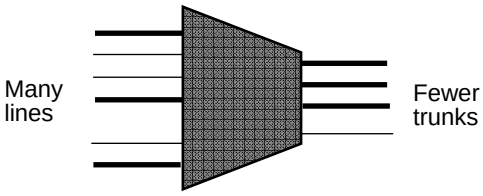

- Traffic fluctuates as calls initiated & terminated
  - Driven by human activity
- Providing resources so
  - Call requests *always* met is too expensive
  - Call requests met *most of the time* cost-effective
- Switches concentrate traffic onto *shared* trunks
  - Blocking of requests will occur if no trunks available
- Traffic engineering provisions resources to meet blocking performance targets (e.g. < 1%)

4.7.1 Concentration

- Arrivals: Poisson process with λ calls/sec
- Holding Time: Time a user maintains a connection
  X a exponential random variable with average E[*X*]
- Offered load: rate at which work is offered by users
  a = λ calls/sec * E[*X*] secs/call (Erlangs)
- 1 Erlang: offer load that occupy 1 trunk 100% of the time
- Erlang B formula:
  – Blocking prob: $P_b = B(c,a) = \dfrac{a^c / c!}{\sum_{k=0}^{c} a^k / k!}$

  Where C: number of trunks. a: offered load.
- Utilization = $\lambda(1- P_b)E[X]/C= (1- P_b)a/c$

4.7.1 Concentration

- Quality of Service (Qos): $\leq$ *1%* blocking probability.
- Table *4.2*: size of system (or offered load) ↑ utilization ↑
  – Multiplexing gain
- Example*: Fig 4.58 10* Erlangs A, B, C ↔ D, E, F.
  a) 9 pairs of (src, dest). 10 Erlangs (1%) → 18 trunks/pair. 9x18 = 162 trunks
  b) 90 Erlangs (1%) → 106 trunks

Load	Trunks@1%	Utilization
1	5	0.20
2	7	0.29
3	8	0.38
4	10	0.40
5	11	0.45
6	13	0.46
7	14	0.50
8	15	0.53
9	17	0.53
10	18	0.56
30	42	0.71
50	64	0.78
60	75	0.80
90	106	0.85
100	117	0.85

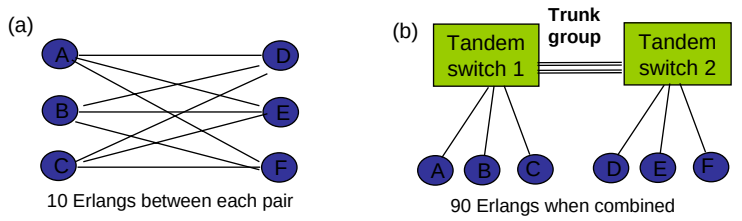

18 trunks for 10 Erlangs
9x18=162 trunks
Efficiency = 90/162=56%

106 trunks for 90 Erlangs
Efficiency = 85%

4.8 cellular telephone Networks

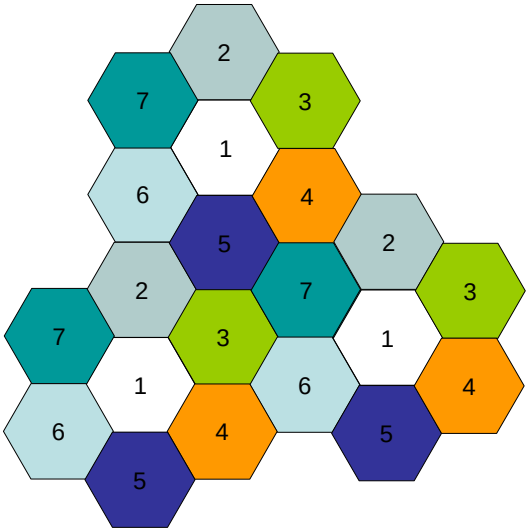

- Regulation: governments regulate the use and allocation of freq. bands. → frequency spectrum be a precious resource
- Frequency reuse: by reducing the power level, the coverage area is reduced and frequency bands can be reused in other areas ⇒ cellular radio communications
  - *Fig 4.63* hexagonal cells, Frequency reuse pattern, Frequency reuse factor

4.8 cellular telephone Networks

- Base station: (BSS) centre of each cell.
  - Forward channel: base station → mobile users
  - Reverse channel: mobile users → base station
- BSSs are connected to MSC (Mobile switch center)
  MSC handles connections between cells as well as to the public switched telephone network (PSTN).
- Handoff: when a user moves from one cell to another, a hand off procedure is carried out to transfer the connection from one base station to the other, without interrupting the call
- In Chap 6, we will discuss more details about: AMPS, GSM, and CDMA